VT-740A

Parhelia B.V.
www.parheliabv.com
+31(0)10 741 00 28

10.4-inch, Six-core Platform, Android 11, Build-in 4G/5G,Vehicle Mount Computer

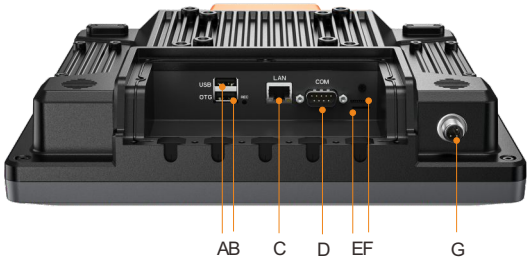

A: USB
B: OTG
C: LAN
D: COM1
E: SIM
F: TF-CARD
G: DC Power Inlet

Introduction

Darveen's VT-740A is a 10.4-inch smart vehicle terminal designed for applications in container terminals. It could be mounted in container trucks, RTG, OTG, and other special vehicles. All of Darveen's VT products are fanless designs with wide working temperatures and wide voltage input. The VT-740A is powered with a high-performance 6-core processor, integrated with a 10.4-inch high-definition touch screen and optional Wi-Fi, 4G/5G, GPS, Bluetooth, and other wireless communication modules to provide real-time communication.

Features

- 10.4-inch(1024x768) LCD with capacitive touch screen
- High-performance 6-core processor, up to 1.8GHz
- Front panel integrated function keys
- Rugged aluminum enclosure and fanless design
- Full IP65 dust/water protection
- Wide range 8-36V DC Power input
- VESA 75 and 100 standard mounting
- Flexible expansion capability for WiFi, Bluetooth, 4G/5G, GPS

MIL-STD 810G | -20~60℃ | 8~36V | IP65 | Touch

Parhelia B.V.
www.parheliabv.com
+31(0)10 741 00 28

VT-740A

Dimensions

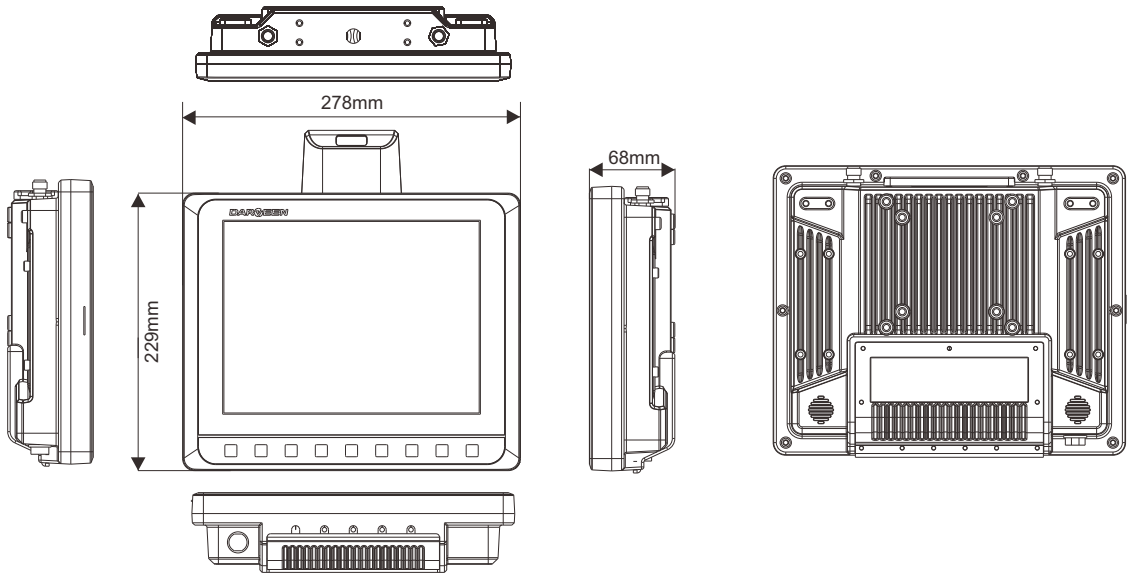

Specifications

System

Processor	ARM Dual-core A72 + Quad-core A53, up to 1.8GHz
RAM	4GB LPDDR4
Flash Memory	32GB EMMC
Expansion Slot	1 x TF Card, up to 128GB
Operation System	Android 11

Display

Size	10.4-Inch
LCD panel	Industry Grade
Resolution(H x V)	1024 x 768
Brightness	450cd/m²
Backlight	LED Backlight
Touchscreen	Capacitive

Button

Button	Power on/off, Brightness +/-, F1-F6 Function

Wireless

WLAN	802.11 a/b/g/n/ac (2.4G/5G)
WWAN	4G LTE FDD/TDD, TD-SCDMA/WCDMA, CDMA/GSM 5G NR/NSA/SA, LTE FDD/TDD, WCDMA (Optional)
GPS	GPS/GLONASS/BeiDou/QZSS/Galileo/SBAS
Bluetooth	Bluetooth V4.2

I/O Ports

COM Port	1 x RS232
USB	1 x USB 1 x USB / OTG
Ethernet	1 x 1000M RJ45
SIM	1 x Nano-SIM

Audio

Speaker	2 x 8Ω/2W

Power Management

Power Input	8~36VDC
Power Consumption	10W typ.

Environmental

Operating Temperature	-20℃ ~ +60℃
Storage Temperature	−30℃ ~ +70℃
IP Protection Level	IP65
Standard Mounting	VESA 75/100
Testing standard	MIL-STD 810G
Authentication	CE FCC

Mechanical

Dimension	278 x 229 x 68 mm
Weight	3.2 Kg