DPC-9210

Parhelia B.V.
www.parheliabv.com
+31(0)10 741 00 28

21.5" Industrial Touch Panel PC with Intel® Core™ U-Series / Celeron® Processor

Overview

The DPC-9210 series is a 21.5" fanless industrial panel PC based on the Intel® Core™ U-Series / Celeron® processor. It features a modular design to allow easy CPU board or I/O board upgrades to fulfill customer needs. The DPC-9210 series offers low-power consumption, rich I/O connectivity, and Wi-Fi module expansion. It boasts a sleek design with an IP65 aluminum alloy front panel and a durable metal body, offering superior heat dissipation and high reliability for operation in harsh industrial environments. The DPC-9210 series is an excellent HMI platform for industrial applications and factory automation.

Features

- 21.5" LED-backlit LCD with capacitive or resistive touch screen
- Rugged aluminum enclosure and fanless design
- Intel® Core™ U-Series / Celeron® processor
- 2x COM, 4x USB, 2x LAN, 1x VGA, 1x HDMI
- Supports Wi-Fi, 4G
- VESA 100 mount and panel mount compatibility
- IP65 compliant front panel

Operating Temp. Fanless IP65 Touch Display

I/O Interfaces

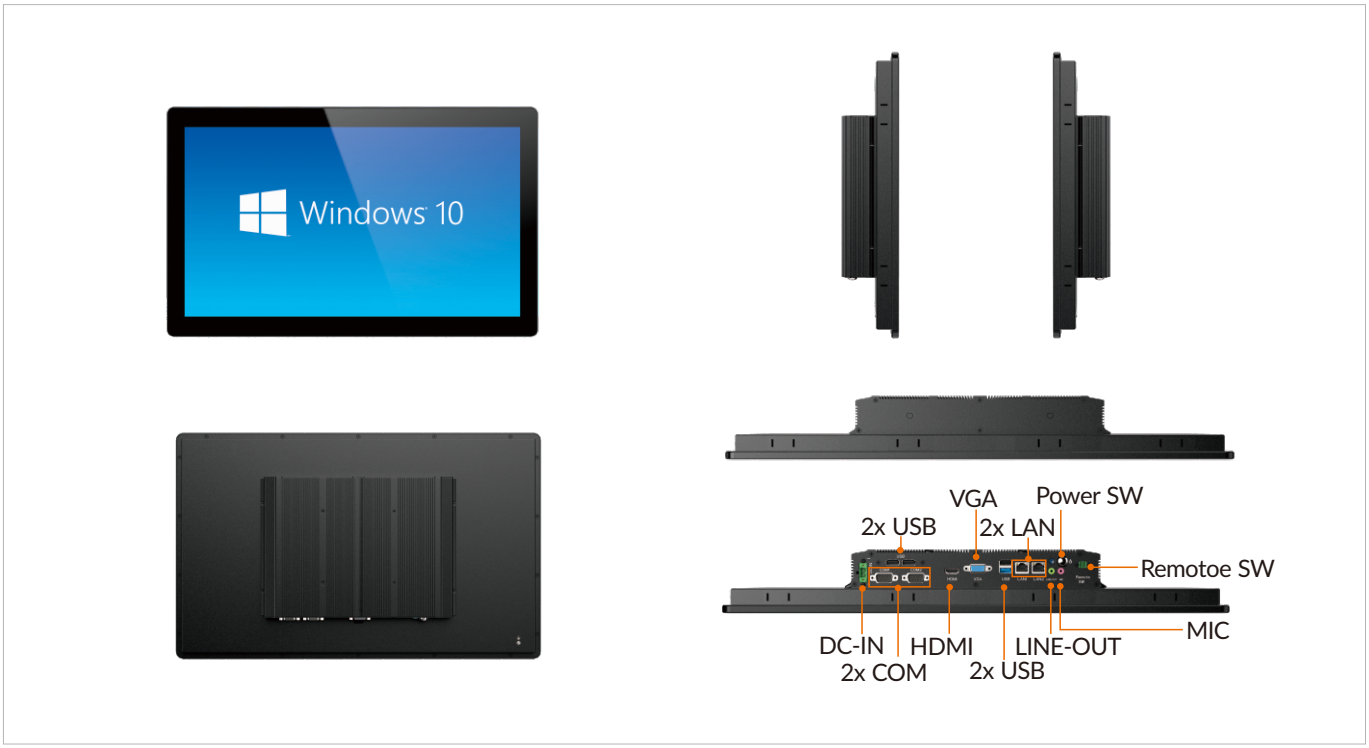

PARHELIA
Parhelia B.V.
www.parheliabv.com
+31(0)10 741 00 28
DARVEEN

Specifications

Display	DPC-9210-J6412	DPC-9210-6200U	DPC-9210-10210U	DPC-9210-10710U
Size	21.5 inch			
Touch Type	Projected capacitive multi touch 5-wire resistive touch			
Transmittance	87% (capacitive) / 80% (resistive)			
Control Interface	USB			
Surface Hardness	≥7H/≥3H			
Resolution	1920 x 1080			
Luminance	250 nits			
Contrast Ratio	1000: 1			
View Angles	89 (left), 89 (right), 89 (up), 89 (down)			
LED Lifetime	40,000 hrs			
Color	16.7M			
System				
CPU	Intel® Celeron® J6412 (2.0 GHz) processor	Intel® Core™ i5-6200U (2.3 GHz) processor	Intel® Core™ i5-10210U (1.6 GHz) processor	Intel® Core™ i7-10710U (1.1 GHz) processor
Memory	1 x SO-DIMM DDR4-3200MHz, up to 16GB	2 x SO-DIMM DDR3-1600MHz, up to 16GB	2 x SO-DIMM DDR4-2666MHz, up to 32GB	2 x SO-DIMM DDR4-2666MHz, up to 32GB
Storage	1 x 2.5" SATA HDD/SSD (optional) 1 x full length Mini PCIe for mSATA SSD			
I/O Ports				
USB	2 x USB 3.0, 2x USB 2.0			
Serial	2 x COM (COM1 supports RS-232, COM2 supports RS-232/422/485)			
Ethernet	2 x GbE LAN			
Display	1 x HDMI, 1x VGA			
SIM Card Slot	1 x SIM slot for 4G (optional)			
Antenna	2 x SMA antenna holes			
Expansion Slot				
Mini PCIe	1 x full length Mini PCIe for Wi-Fi 1 x full length Mini PCIe for mSATA			
RF Communication				
Wi-Fi	Mini PCIe expansion (optional)			
Cellular	Mini PCIe expansion (optional)			
Bluetooth	Mini PCIe expansion (optional)			
Audio				
Audio	Mic in, line out			
Speaker	2Ω5W speaker (optional)			
Power				
Button	YES			
Remote Power On/Off	1 x Remote switch connector			
DC Input	12VDC (9-36VDC optional)			
Power Connector	M8			
Power Consumption	23W	29W		
Power Adaptor	AC-DC, 12V@5A, 60W		AC-DC, 12V@7A, 84W	
Operating System				
Windows	Windows 10/11	Windows 7/10	Windows 10/11	
Mechanical				
Dimensions (W x D x H)	528 x 326 x 66 mm (20.7 x 12.8 x 2.6 inches)			
Weight (N.W.)	7.9 kg (17.4 lbs)			
Mounting	Panel mount, wall mount bracket VESA 100			
Material	Aluminum alloy panel, all-metal chassis			

Environment	
Operating Temperature	-10 to 50°C (14 to 122°F)
Storage Temperature	-20 to 60°C (-4 to 140°F)
Relative Humidity	10% to 95% @ 40°C (104°F), non-condensing
Vibration	5-500Hz, 0.026 G^2/Hz, 2.16 Grms, X, Y, Z, 1 hour per axis
IP Rating	IP65 compliant (for front panel)
Certification	
EMC	CE, FCC
Packing List	
Packing	1 x DPC-9210 1 x AC-DC power adapter 12 x panel mounting buckles 1 x warranty card
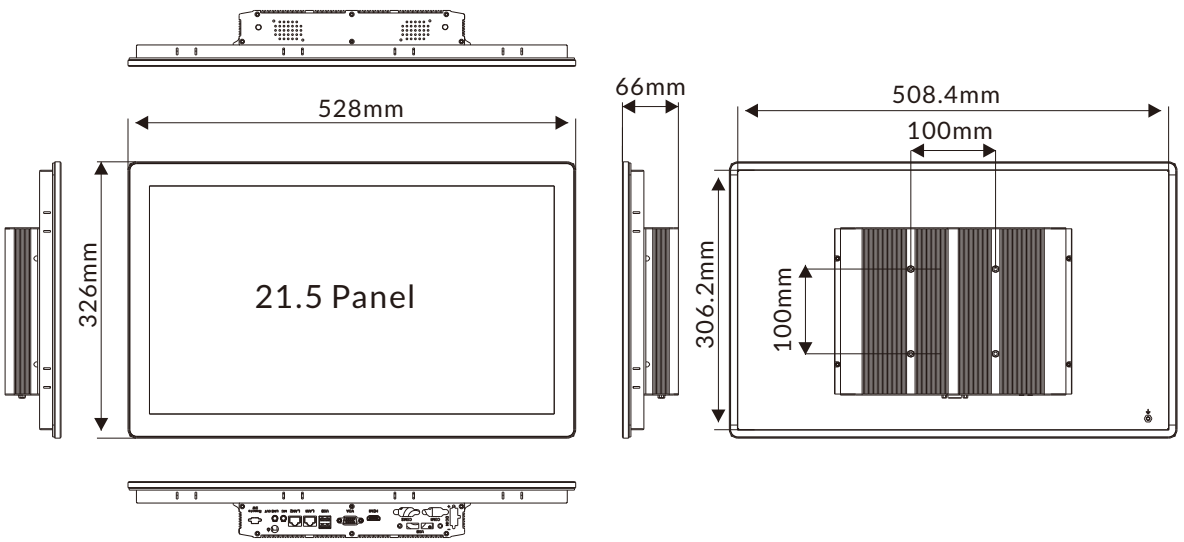
Dimensions